DATA SHEET

WAFER TYPE BUTTERFLY VALVE

<table>
<tr><td>Description</td><td>Duvalco Wafer Type Butterfly Valves are the Concentric designed disc with bonded liner body. Overall design generally in accordance to BS EN 593. Body construction is ductile iron and disc available in ductile iron, stainless steel 304 or 316, shafts in stainless steel 420, 431, 304 or 316. Aluminium bronze discs also available.
 </td></tr>
<tr><td>Size Range</td><td>DN50 to DN1200</td></tr>
<tr><td>Pressure Rating</td><td>All valves are rated at PN16 for 16 bar continuous working pressure
(Other pressures also available upon request)</td></tr>
<tr><td>Design Standard</td><td>BS EN 593</td></tr>
<tr><td>Materials of Construction</td><td>
<table>
<tr><th>Description</th><th>Material</th><th>Grade</th></tr>
<tr><td>Body</td><td>Ductile Iron</td><td>BS EN 1563 EN-GJS-400-15</td></tr>
<tr><td>Disc</td><td>Ductile Iron + Rilsan Coated</td><td>BS EN 1563 EN-GJS-400-15</td></tr>
<tr><td>Shaft</td><td>Stainless steel</td><td>BS EN 10088-3 1.4005 (316) (Size below 400mm)
BS EN 10088-3 1.4034 (420) (Size after 450mm)</td></tr>
<tr><td>Liner</td><td>EPDM</td><td>BS EN 681-1 Type WA</td></tr>
</table>
* Other types of materials are also available upon request
</td></tr>
<tr><td>Testing</td><td>PN16 pressure rating valves are tested to the following pressures:-
<table>
<tr><th>Description</th><th>Nominal Pressure</th><th>Hydraulic Test Pressure</th></tr>
<tr><td>Body</td><td>16 bar</td><td>24 bar</td></tr>
<tr><td>Seat</td><td>16 bar</td><td>17.6 bar</td></tr>
</table>
</td></tr>
<tr><td>Direction to close</td><td>Clockwise (CTC)</td></tr>
<tr><td>Corrosion Protection</td><td>1) The external surfaces of the valve body and the disc will be coated with spray applied liquid 2-pack epoxy paint system - primer plus 2 finish coats.
2) Epoxy coating is WRAS listed for potable water applications and meets the requirements of BS 6920 for water quality testing.
3) Coating colour - blue to RAL 5005</td></tr>
</table>

Dutch Valve Company

DATA SHEET

WAFER TYPE BUTTERFLY VALVE

Dimensional Details

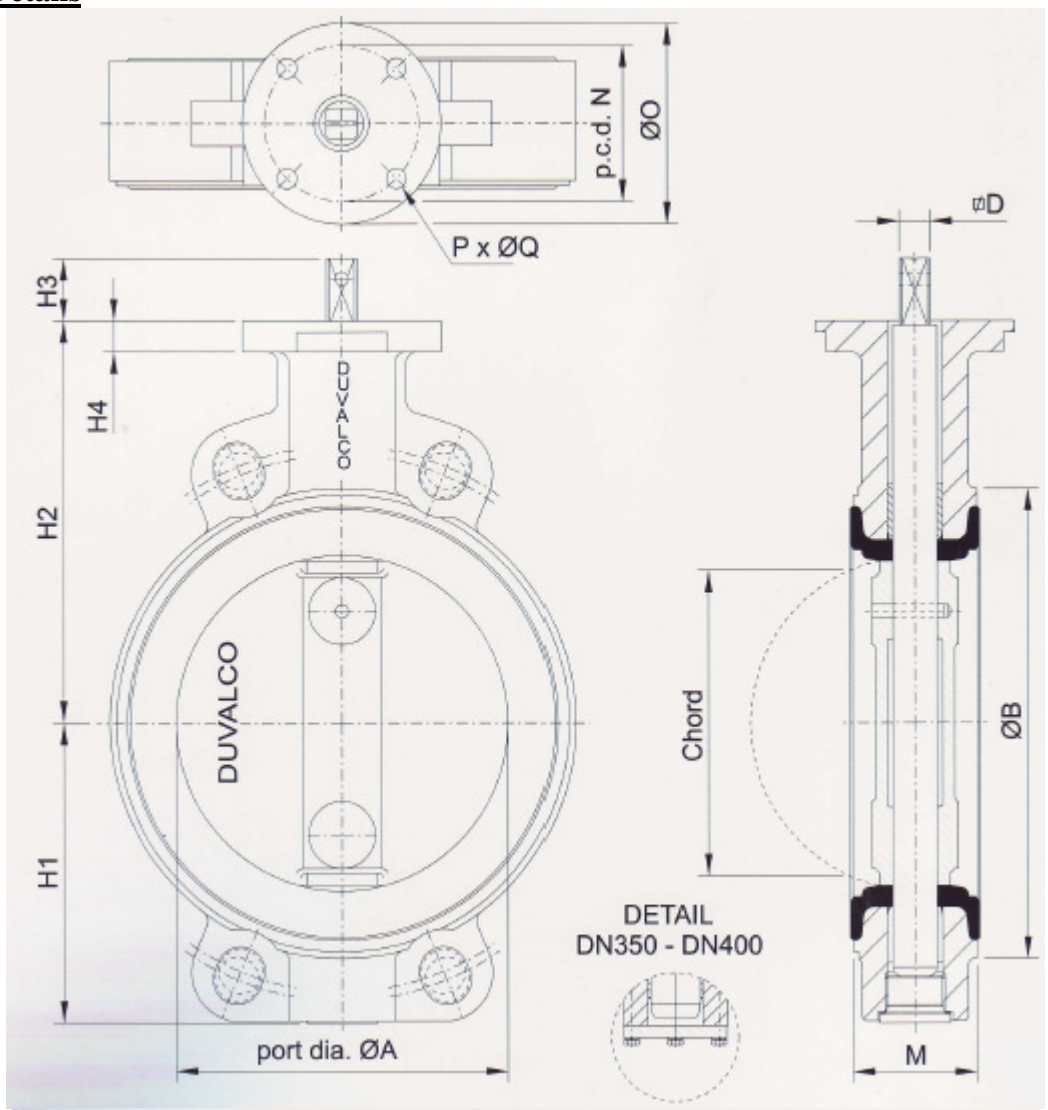

Nominal Size	øA	øB	ØD	H1	H2	H3	H4	M	N	øO	P	øQ	Chord	Weight Kg
50	50	90	11	67	118	25	12	43	70	90	4	9	26	3.0
65	65	105	11	74	126	25	12	46	70	90	4	9	46	3.5
80	80	124	11	82	133	25	14	46	70	90	4	9	65	4.0
100	100	150	11	100	147	25	14	52	70	90	4	9	85	5.5
125	125	182	14	112	160	28	14	56	70	90	4	9	112	8.0
150	150	210	14	134	180	28	14	56	70	90	4	9	139	11
200	200	265	17	159	204	28	14	60	70	90	4	9	191	15
250	250	315	22	195	245	30	15	68	102	125	4	11	241	23
300	300	371	22	220	270	30	15	78	102	125	4	11	290	32
350	335	434	27	282	315	29	20	78	125	150	4	14	325	60
400	400	488	27	307	350	29	20	102	125	150	4	14	386	100

All dimensions are in mm.

Dutch Valve Company

DATA SHEET

WAFER TYPE BUTTERFLY VALVE

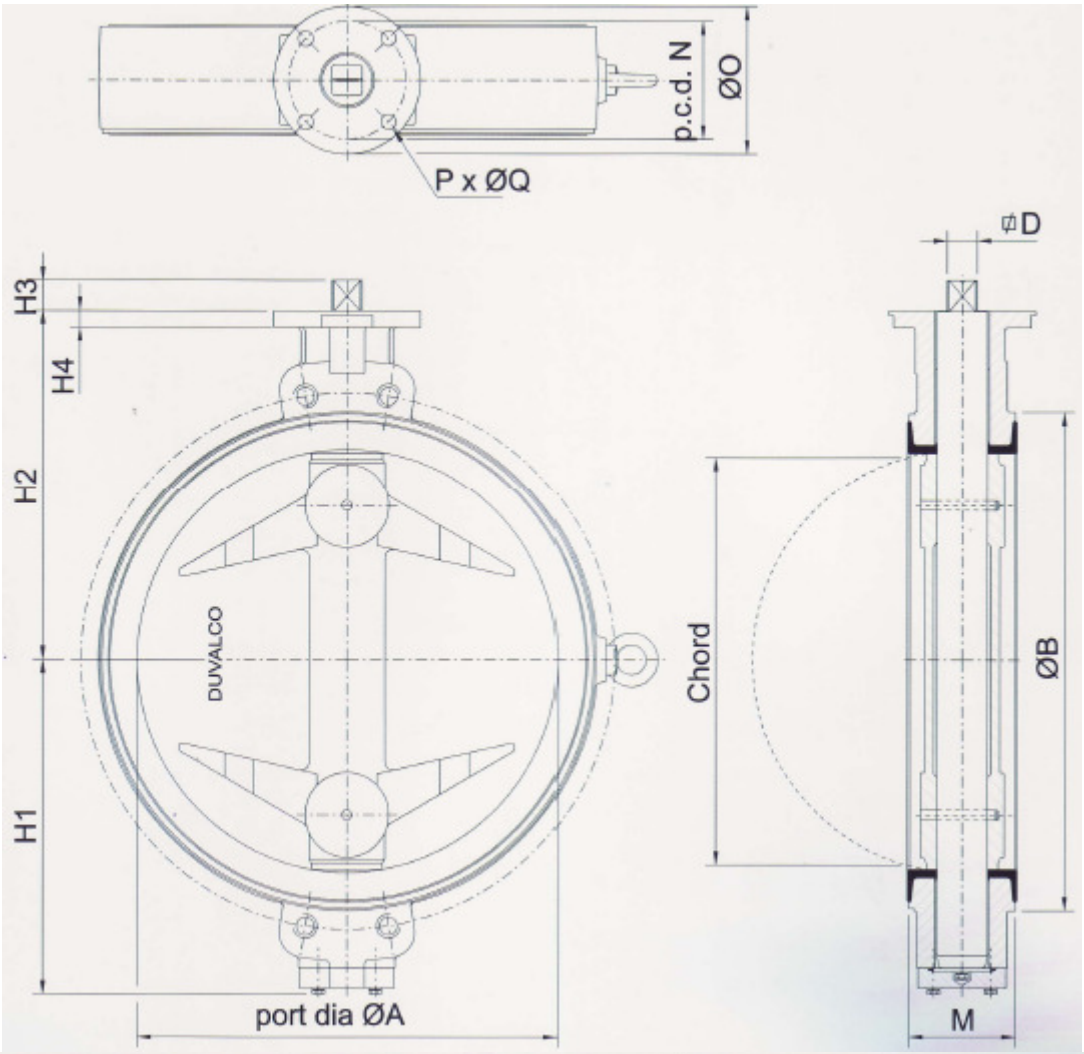

Nominal Size	øA	øB	ØD	H1	H2	H3	H4	M	N	øO	P	øQ	Chord	Weight Kg
450	450	536	36	352	375	38	20	114	140	175	4	18	434	110
500	500	590	36	387	415	38	20	127	140	175	4	18	483	138
600	600	685	46	452	465	48	25	154	165	210	4	22	579	190

All dimensions are in mm.

Dutch Valve Company

DATA SHEET

WAFER TYPE BUTTERFLY VALVE

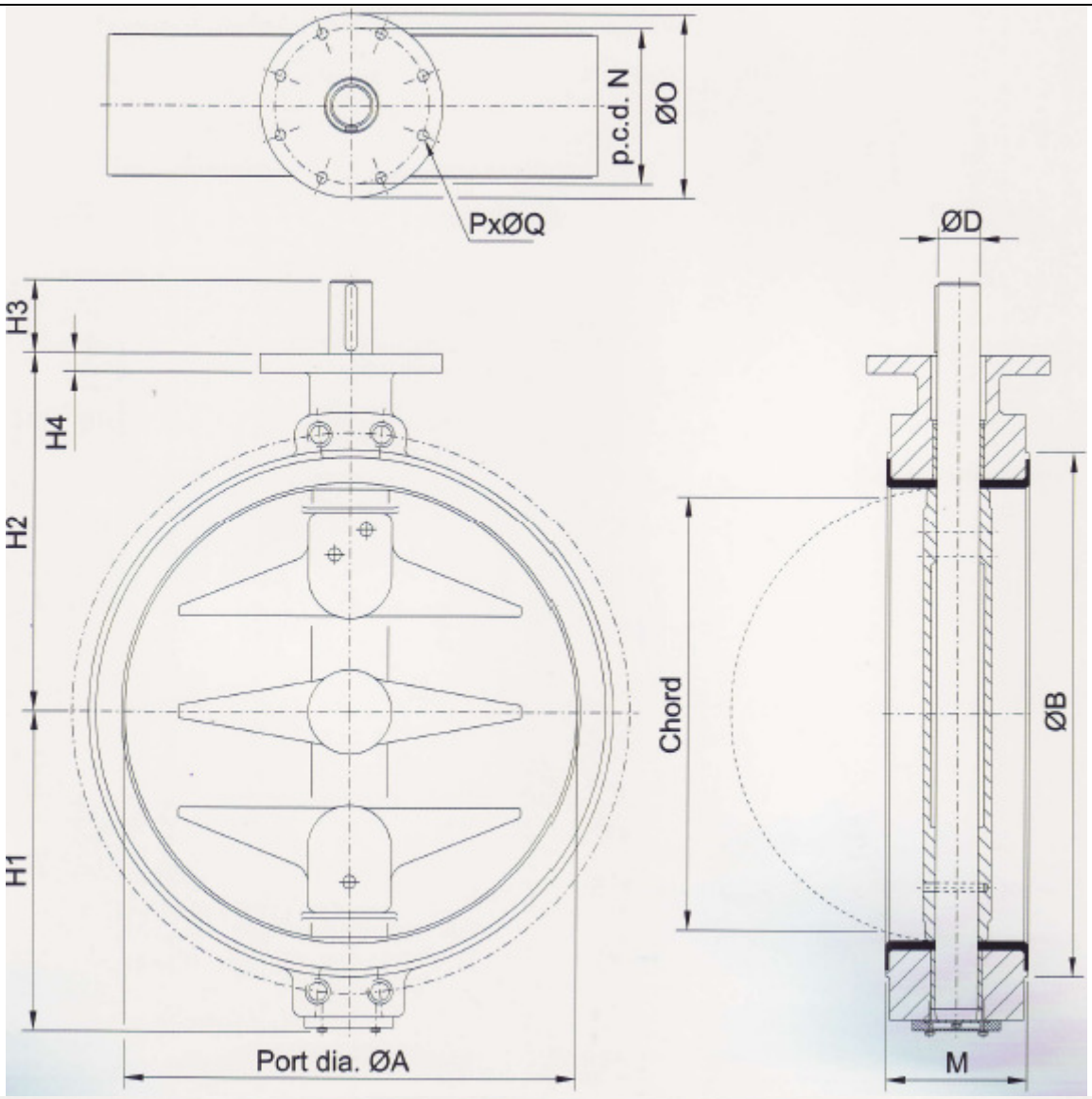

Nominal Size	øA	øB	øD	Key No-size	H1	H2	H3	H4	M	N	øO	P	øQ	Chord	Weight Kg
550	535	635	70	1-20x12x100	420	470	110	25	154	165	210	4	22	512	280
650	640	745	70	1-20x12x100	460	525	110	30	229	254	300	8	18	597	440
700	690	805	80	1-22x14x110	505	550	120	30	229	254	300	8	18	650	565
750	740	860	90	1-25x14x110	540	580	120	30	229	254	300	8	18	703	625
800	790	910	100	1-28x16x110	565	610	120	30	241	254	300	8	18	752	680
900	890	1010	110	2-28x16x110	625	675	120	30	241	254	300	8	18	856	900
1000	985	1110	120	2-32x18x140	695	725	160	30	300	254	300	8	18	938	1150
1100	1085	1220	125	2-32x18x140	790	850	160	40	300	298	350	8	22	1043	1335
1200	1185	1325	130	2-32x18x140	805	875	160	40	350	298	350	8	22	1132	1483

Face-to-face length
Face to face dimension in accordance to BS EN 558 /ISO 5752 Basic Series 20 (series 16 from DN700 and up)

PN10 also available as standard, plus ASME B16.47 Class 150 series A
Full range of sizes DN50 to DN1200 also available.

**** Note:***
Please refer to General Arrangement drawing for full details of valves

Marking	**All valves are marked with the following information:-** - Size - PN rating - 'Duvalco' - Material – GGG50 - BS EN 593 - Year of manufacture
Packing	All valves will be despatched properly packed, with all items separated to avoid damage to coating, castings, facings, flange faces, etc.